18.Camshaft

A: REMOVAL

NOTE:
Perform the work with the engine installed to body when replacing a single part. Refer to “Valve Clearance” for preparation. <Ref. to ME(H4DOTC)-32, Valve Clearance.>

1) Remove the V-belts. <Ref. to ME(H4DOTC)-44, REMOVAL, V-belt.>
2) Remove the crank pulley. <Ref. to ME(H4DOTC)-46, REMOVAL, Crank Pulley.>
3) Remove the timing belt cover. <Ref. to ME(H4DOTC)-47, REMOVAL, Timing Belt Cover.>
4) Remove the timing belt. <Ref. to ME(H4DOTC)-48, REMOVAL, Timing Belt.>
5) Remove the cam sprocket. <Ref. to ME(H4DOTC)-56, REMOVAL, Cam Sprocket.>
6) Disconnect the oil flow control solenoid valve assembly connector.

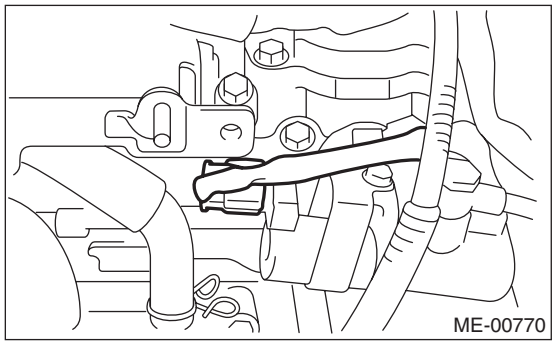

7) Remove the timing belt cover No. 2 (LH).

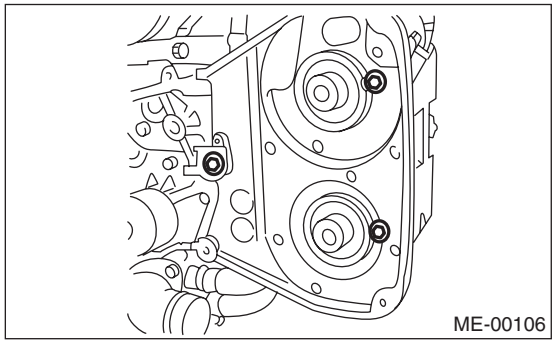

8) Remove the tensioner bracket.

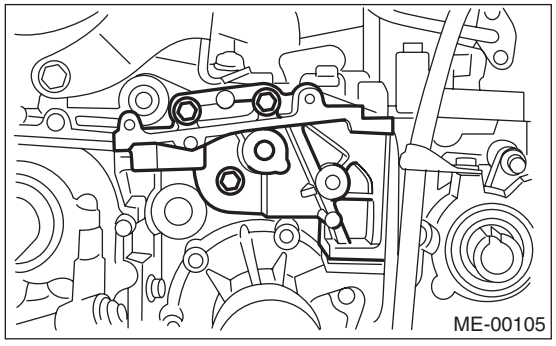

9) Remove the timing belt cover No. 2 (RH).

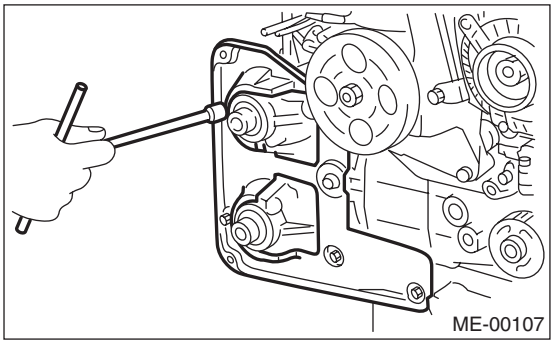

10) Remove the ignition coil.
11) Disconnect the PCV hose from the rocker cover.
12) Remove the oil level gauge guide. (LH side)
13) Remove the rocker cover and gasket.
14) Remove the oil pipe.

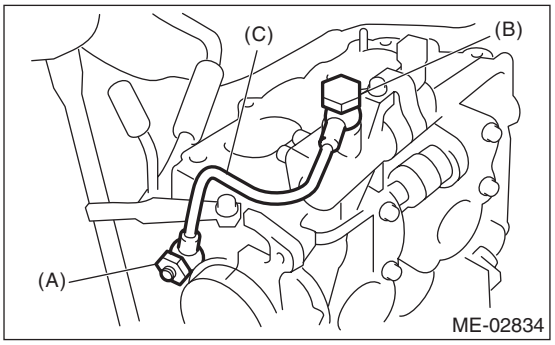

(A) Union screw with filter (with protrusion)
(B) Union screw without filter (without protrusion)
(C) Oil pipe

15) Loosen the oil flow control solenoid valve assembly and intake camshaft cap bolts equally, a little at a time in alphabetical order shown in the figure.

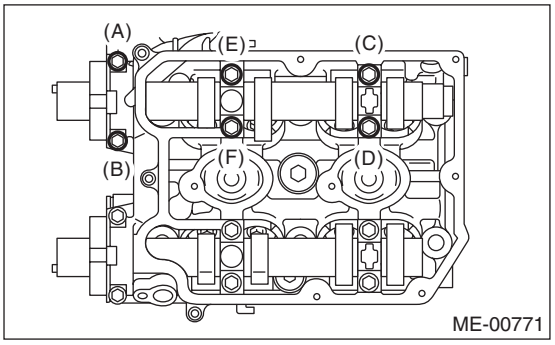

16) Loosen the exhaust camshaft cap bolts equally, a little at a time in alphabetical order shown in the figure.

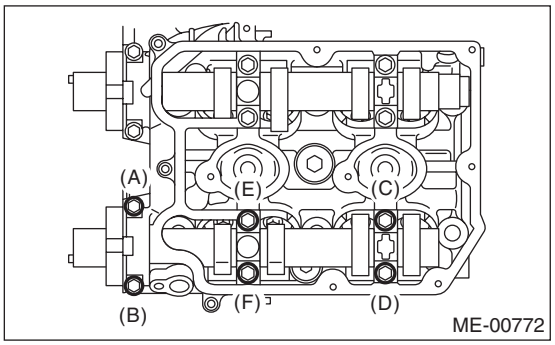

17) Remove the oil flow control solenoid valve assembly, intake camshaft cap and camshaft.
18) Remove the exhaust camshaft caps and camshaft.

NOTE:
Arrange camshaft caps in order so that they can be installed in their original positions.
19) Similarly, remove the camshafts (RH) and related parts.

B: INSTALLATION

1) Install the camshaft.
Apply engine oil to the cylinder head at camshaft bearing installation location before installing the camshaft. Install the camshaft so that each valve is close to or in contact with base circle of the cam lobe.

NOTE:
- Set the camshaft to the position shown in the figure. It is necessary to rotate the camshaft (LH) slightly when installing the timing belt.
- Camshaft (RH) need not be rotated when set at the position shown in the figure.

Intake camshaft (LH):
Rotate 80° clockwise.

Exhaust camshaft (LH):
Rotate 45° counterclockwise.

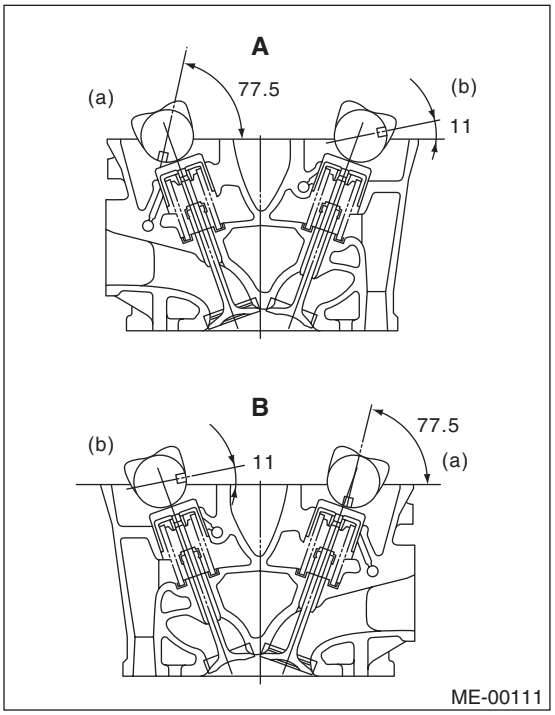

A Cylinder head (LH)
B Cylinder head (RH)
(a) Intake camshaft
(b) Exhaust camshaft

2) Install the camshaft cap and oil flow control solenoid valve assembly.

(1) Apply small amount of liquid gasket to the mating surface of cap.

NOTE:
Do not apply liquid gasket excessively. Applying excessively may cause excess gasket to come out and flow toward oil seal, resulting in oil leak.

Liquid gasket:
THREE BOND 1215 (Part No. 004403007) or equivalent

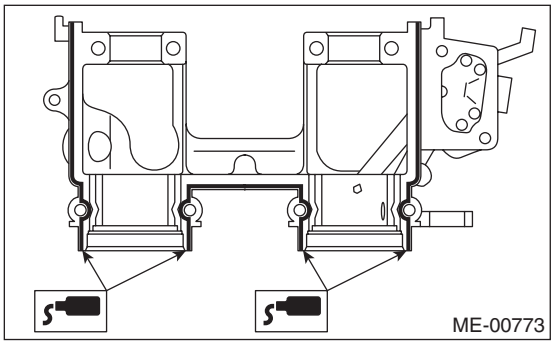

(2) Apply a thin coat of engine oil to cap bearing surface, and install the cap to the camshaft.

(3) Gradually tighten the camshaft cap and oil control valve assembly in at least two stages in alphabetical order shown in the figure, and then tighten to specified torque.

Tightening torque:
T1: 9.75 N·m (1.0 kgf-m, 7.2 ft-lb)
T2: 20 N·m (2.0 kgf-m, 14.8 ft-lb)

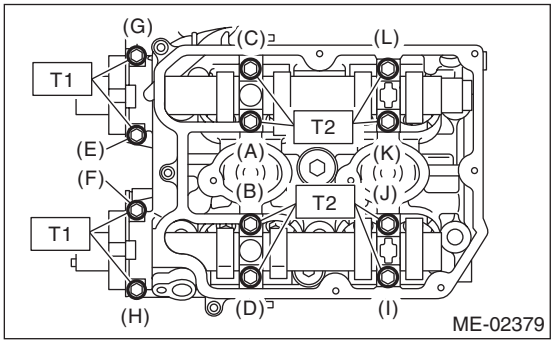

(4) After tightening the camshaft cap, ensure the camshaft rotates only slightly while holding it at base circle.

3) Apply a coat of engine oil to oil seal periphery and oil seal lips and install the oil seal on camshaft using ST1 and ST2.

NOTE:
Use a new oil seal.

ST1	499587600	OIL SEAL INSTALLER
ST2	499597200	OIL SEAL GUIDE

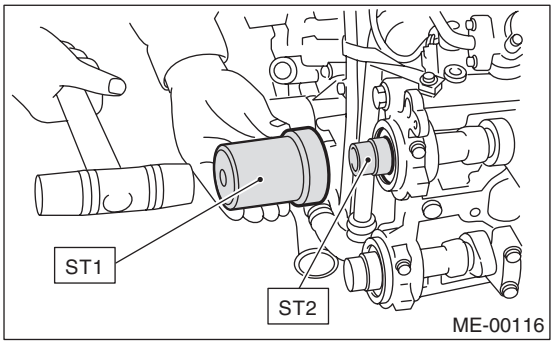

4) Install the rocker cover.

(1) Install the gasket on rocker cover. Install the peripheral gasket and ignition coil unit gasket.

NOTE:
Use a new gasket.

(2) Apply liquid gasket to the specified point of the cylinder head.

NOTE:
Apply extra liquid gasket around semicircular plugs 5 mm (0.2 in) or more.

Liquid gasket:
THREE BOND 1215 (Part No. 004403007) or equivalent

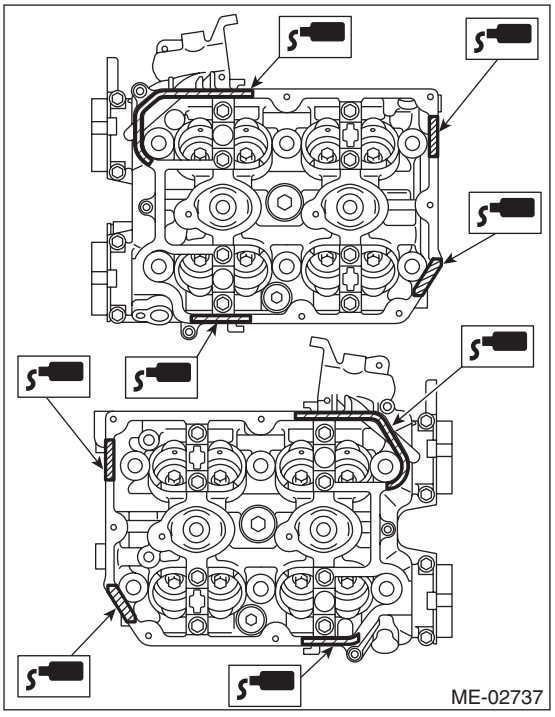

(3) Install the rocker cover on cylinder head. Ensure the gasket is properly positioned during installation.
(4) Temporarily tighten the rocker cover tightening bolt in alphabetical sequence shown in the figure, and then tighten to specified torque in alphabetical order.

Tightening torque:
6.4 N·m (0.65 kgf-m, 4.7 ft-lb)

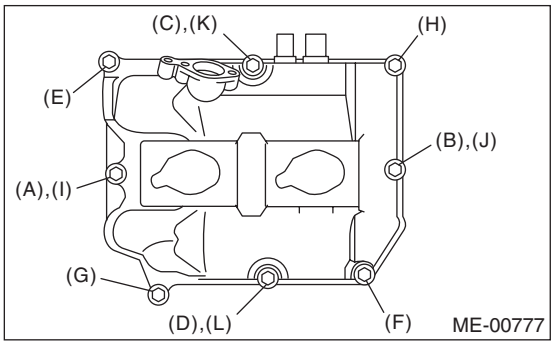

5) Install the oil pipe.

NOTE:
Be careful of the installing location of the union screw; the location will differ depending on whether or not there is a filter.

Tightening torque:
29 N·m (3.0 kgf-m, 21.4 ft-lb)

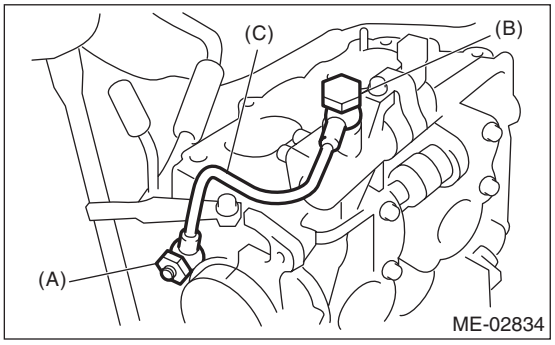

(A) Union screw with filter (with protrusion)
(B) Union screw without filter (without protrusion)
(C) Oil pipe

6) Connect the oil flow control solenoid valve connector.

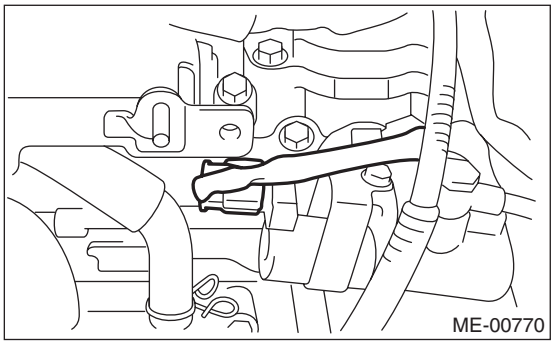

7) Similarly, install the parts on right-hand side.
8) Install the tensioner bracket.

Tightening torque:
24.5 N·m (2.5 kgf-m, 18.1 ft-lb)

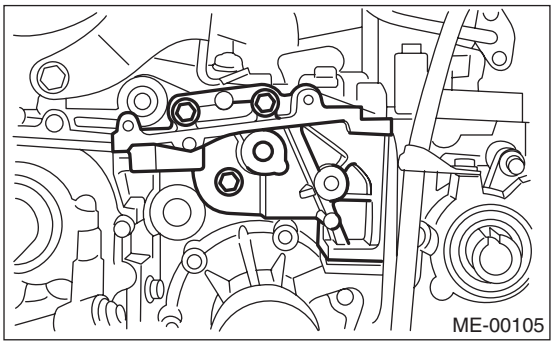

9) Install the timing belt cover No. 2 (RH).

Tightening torque:
5 N·m (0.5 kgf-m, 3.6 ft-lb)

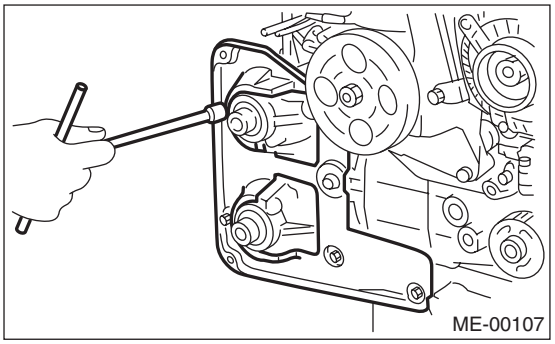

10) Install the timing belt cover No. 2 (LH).

Tightening torque:
5 N·m (0.5 kgf-m, 3.6 ft-lb)

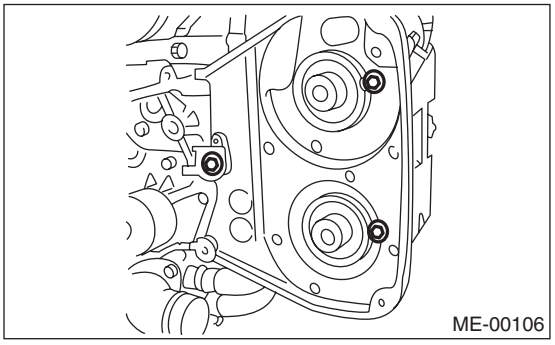

11) Install the cam sprocket. <Ref. to ME(H4DOTC)-56, INSTALLATION, Cam Sprocket.>
12) Install the timing belt. <Ref. to ME(H4DOTC)-50, INSTALLATION, Timing Belt.>
13) Install the timing belt cover. <Ref. to ME(H4DOTC)-47, INSTALLATION, Timing Belt Cover.>
14) Install the crank pulley. <Ref. to ME(H4DOTC)-46, INSTALLATION, Crank Pulley.>
15) Install the V-belts. <Ref. to ME(H4DOTC)-44, INSTALLATION, V-belt.>

C: INSPECTION

1) Measure the bend, and repair or replace if necessary.

Service limit:
0.020 mm (0.00079 in)

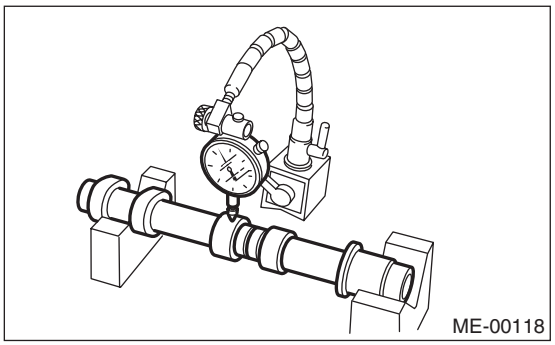

2) Check the journal for damage and wear. Replace if faulty.
3) Check the cutout portion used for camshaft sensor for damage. Replace if faulty.
4) Measure the outside diameter of camshaft journal. If the journal diameter is not within the standard value, check the oil clearance.

	Camshaft journal	
	Front	Center, rear
Standard mm (in)	37.946 — 37.963 (1.4939 — 1.4946)	29.946 — 29.963 (1.1790 — 1.1796)

5) Measurement of the camshaft journal oil clearance
(1) Clean the bearing caps and camshaft journals.
(2) Place the camshafts on cylinder head. (Without installing the valve lifter)
(3) Place a plastigauge across each camshaft journals.
(4) Gradually tighten the cap in at least two stages in alphabetical order shown in the figure, and then tighten to specified torque. Do not turn the camshaft.

Tightening torque:
T1: 9.75 N·m (1.0 kgf-m, 7.2 ft-lb)
T2: 20 N·m (2.0 kgf-m, 14.8 ft-lb)

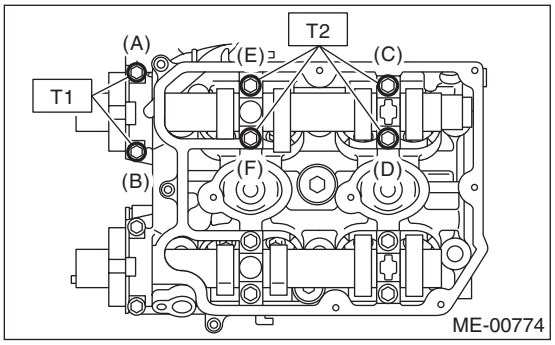

(5) Remove the bearing caps.
(6) Measure the widest point of the plastigauge on each journal. If the oil clearance exceeds the limit, replace the camshaft. If necessary, replace the camshaft caps and cylinder head as a set.

Standard:
0.037 — 0.072 mm (0.0015 — 0.0028 in)

Service limit:
0.10 mm (0.0039 in)

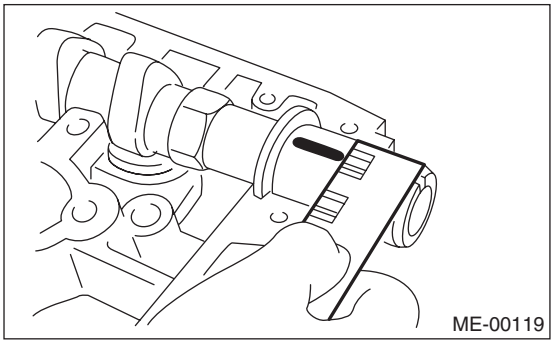

(7) Completely remove the plastigauge.
6) Check the cam face condition; remove the minor faults by grinding with oil stone. Measure the cam height H. Replace if it exceeds the limit or there is uneven wear.

Cam height H:

Standard
Intake
46.55 — 46.65 mm (1.833 — 1.837 in)
Exhaust
46.75 — 46.85 mm (1.841 — 1.844 in)

Limit
Intake
46.45 mm (1.829 in)
Exhaust
46.65 mm (1.837 in)

Cam base circle diameter A:
37.0 mm (1.457 in)

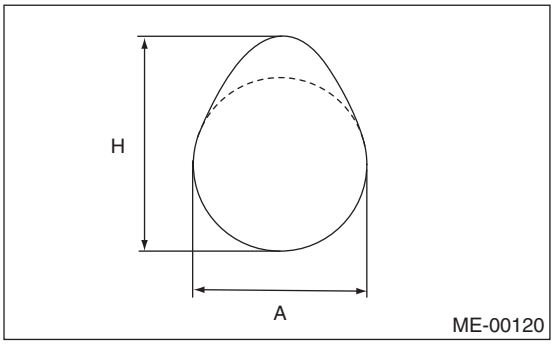

7) Measure the thrust clearance of camshaft with setting the dial gauge at end of camshaft. If the thrust clearance exceeds the limit or there is uneven wear, replace the caps and cylinder head as a set. If necessary replace the camshaft.

Standard:
0.068 — 0.116 mm (0.0027 — 0.0046 in)
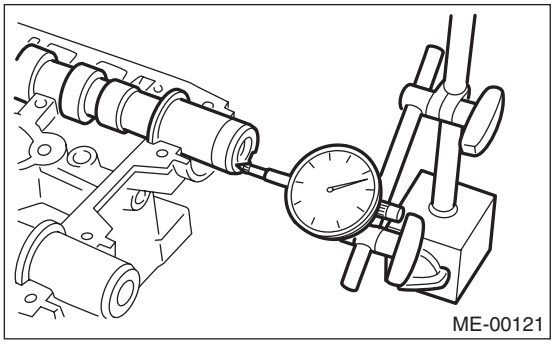
Service limit:
0.14 mm (0.0055 in)